SCALE
20=1

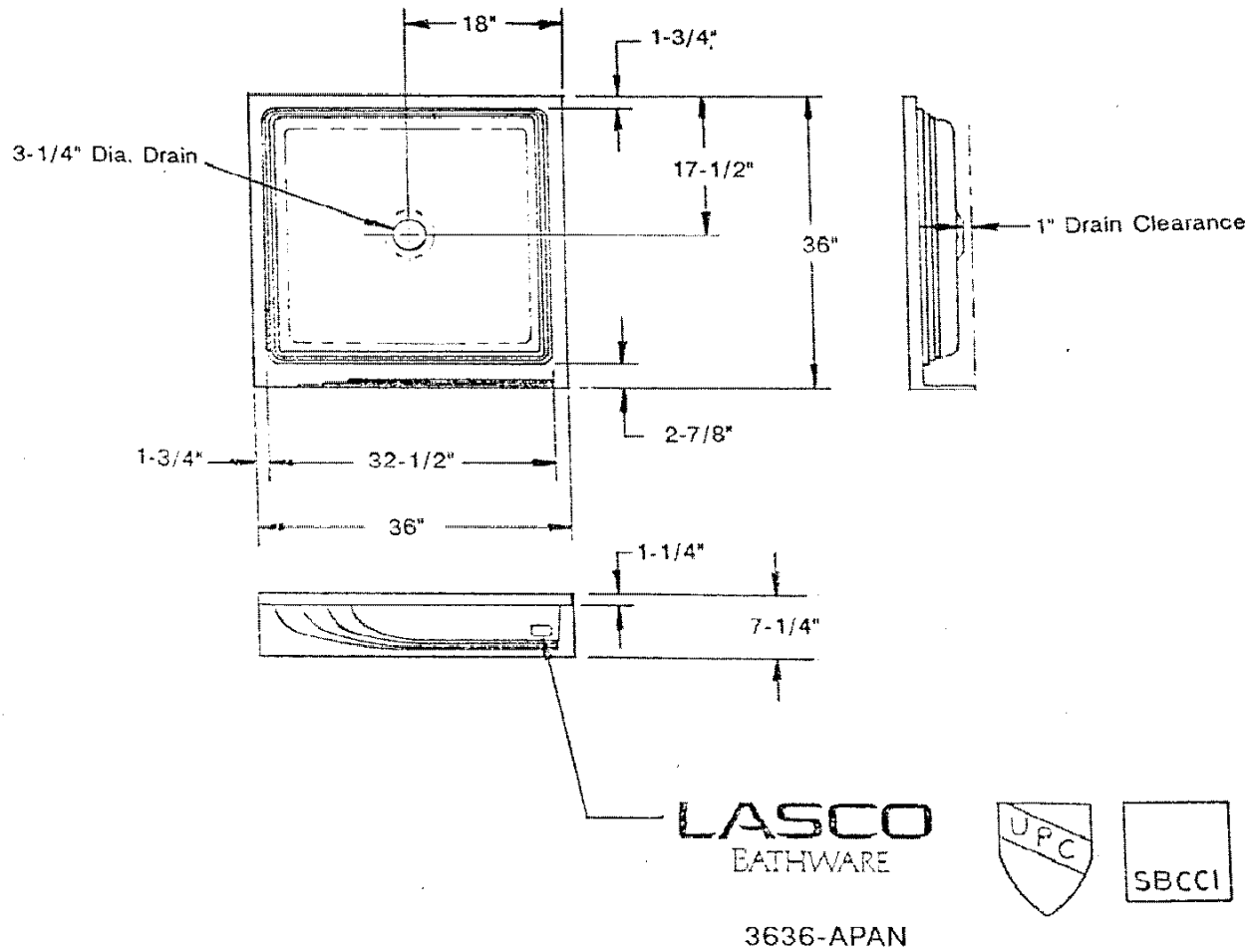

LASCO
BATHWARE

ACRYLIC SHOWER PAN
MODEL 3636-APAN

7/99